--- REVISION ---					
REV	DESCRIPTION	DATE	EC#	APPROVE MECH	APPROVE MFG

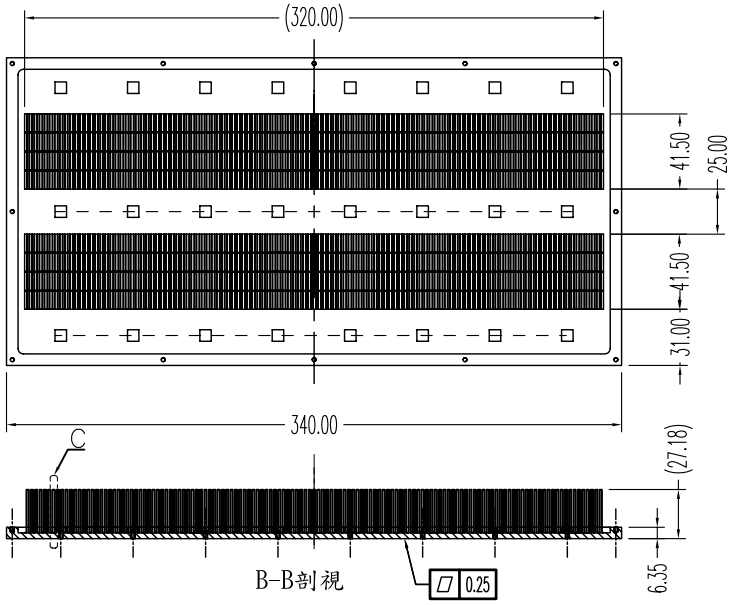

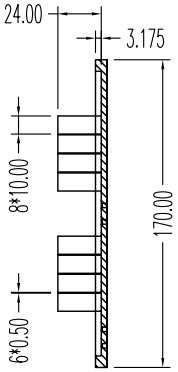

A-A剖視

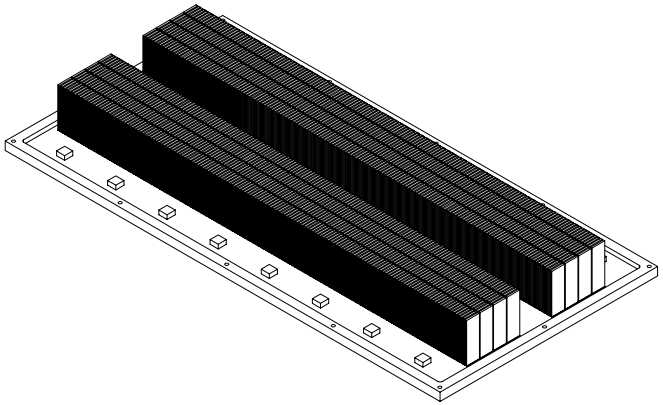

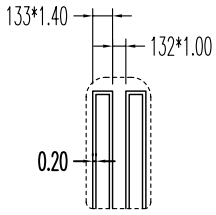

C部放大比
例為5：1

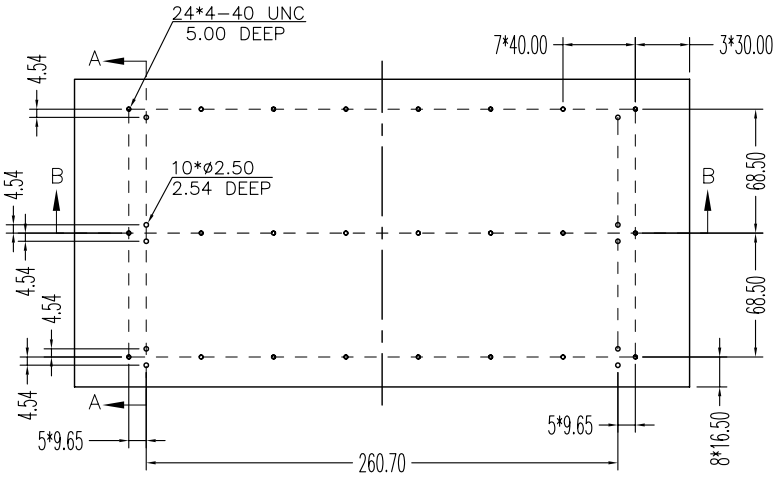

NOTES: <UNLESS OTHERWISE SPECIFIED>
1. ALL DIMENSIONS ARE IN INCHES.
2. REMOVE ALL BURRS AND SHARP EDGES.
3. MATERIAL: C1100
4. FINISH: Passvation, RoHS COMPLIANT.
5. TOLERANCES , DECIMALS : .xx ± 0.30
.xxx ± 0.254
ANGLES: ± 1°

Jan Mao Industries Co.,Ltd
TEL:752-6860900 FAX:752-6860910

Unit: mm						Edition	REV A0
Sheet 1 Of 1						View	
Scale: 1:2							
Drawing No.	D01-25289-J01-C	Customer PN		Checked		Approval	
Mfg. PN	252890B0000-0A-GP	Material	C1100	Engineer			
Description		Finish	Passivation	Drawn		Date	2008/08/14